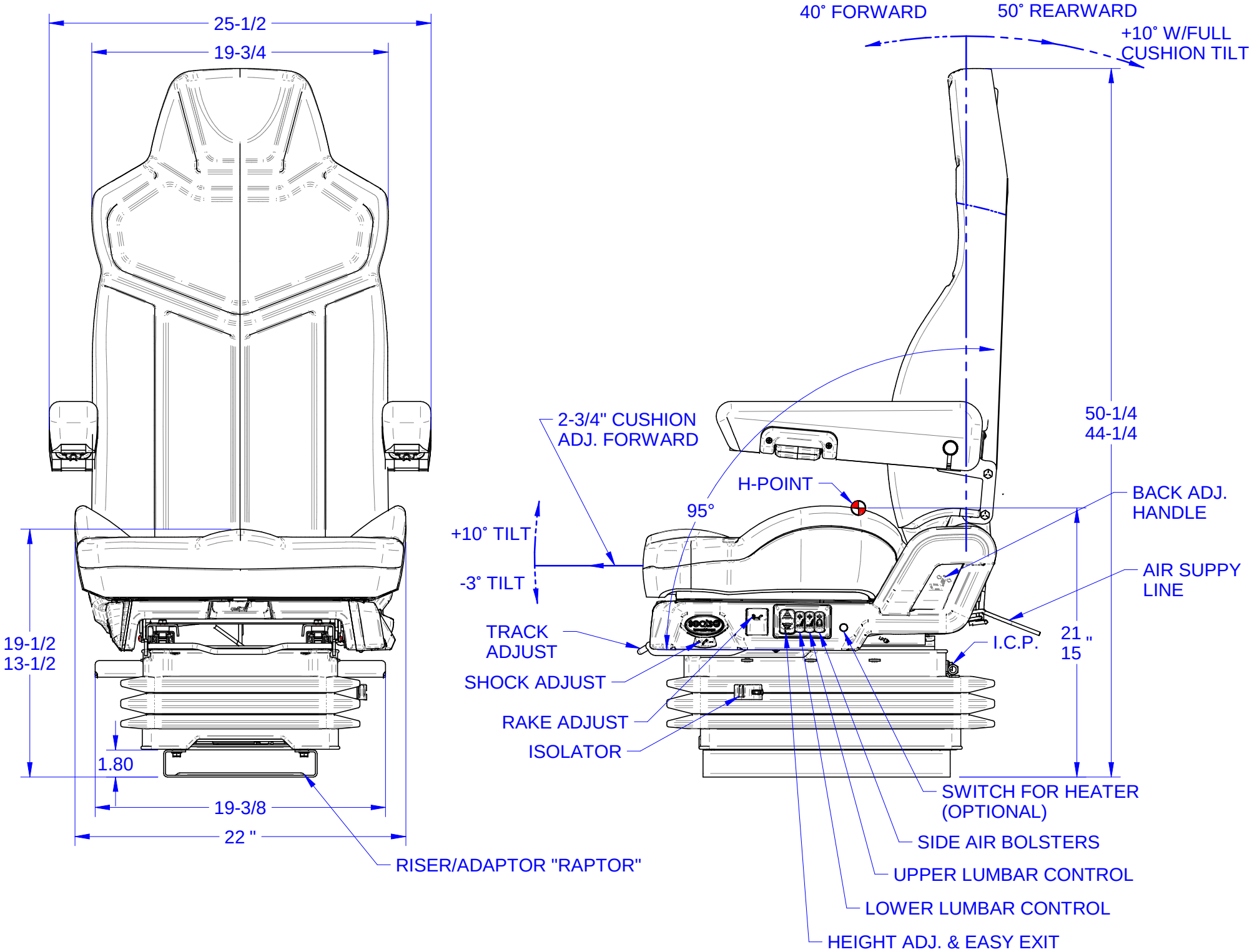
25-1/2
19-3/4
19-1/2
13-1/2
1.80
19-3/8
22 "
RISER/ADAPTOR "RAPTOR"
40˚ FORWARD
50˚ REARWARD
+10˚ W/FULL
CUSHION TILT
2-3/4" CUSHION
ADJ. FORWARD
50-1/4
44-1/4
H-POINT
95˚
BACK ADJ.
HANDLE
+10˚ TILT
-3˚ TILT
AIR SUPPY
LINE
TRACK
ADJUST
I.C.P.
21 "
15
SHOCK ADJUST
RAKE ADJUST
ISOLATOR
SWITCH FOR HEATER
(OPTIONAL)
SIDE AIR BOLSTERS
UPPER LUMBAR CONTROL
LOWER LUMBAR CONTROL
HEIGHT ADJ. & EASY EXIT